N-CHANNEL ENHANCEMENT MODE POWER MOSFET

70N03

Description

The 70N03 uses advanced trench technology and design to provide excellent $R_{DS(ON)}$ with low gate charge. It can be used in a wide variety of applications.

General Features

VDSS	RDS(ON) @10V (typ)	ID
30V	5.5 mΩ	70A

- High density cell design for ultra low Rdson
- Fully characterized avalanche voltage and current
- Excellent package for good heat dissipation

Application

- Power switching application
- Hard switched and high frequency circuits
- Uninterruptible power supply

TO-252

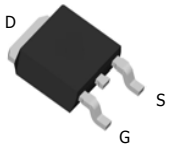

TO-251

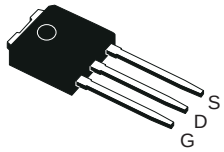

Equivalent Circuit

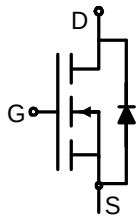

MARKING

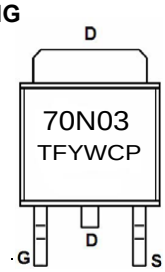

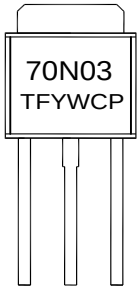

Y :year code W :week code

Absolute Maximum Ratings (T_A=25℃unless otherwise noted)

Parameter	Symbol	Limit	Unit
Drain-Source Voltage	V_{DS}	30	V
Gate-Source Voltage	V_{GS}	±20	V
Drain Current-Continuous	I_D	70	A
Drain Current-Pulsed (Note 1)	I_{DM}	245	A
Maximum Power Dissipation	P_D	46	W
Operating Junction and Storage Temperature Range	T_J,T_{STG}	-55 To 150	℃

Thermal Characteristic

Thermal Resistance,Junction-to-Ambient (Note 2)	$R_{\theta JA}$	2.1	℃/W

Electrical Characteristics (T_A=25℃unless otherwise noted)

Parameter	Symbol	Condition	Min	Typ	Max	Unit
Off Characteristics						
Drain-Source Breakdown Voltage	BV_{DSS}	V_{GS}=0V I_D=250μA	30	32	-	V
Zero Gate Voltage Drain Current	I_{DSS}	V_{DS}=28V, V_{GS}=0V	-	-	500	nA

Gate-Body Leakage Current	I_{GSS}	V_{GS}=±20V,V_{DS}=0V	-	-	±100	nA
On Characteristics (Note 3)						
Gate Threshold Voltage	$V_{GS(th)}$	V_{DS}=V_{GS},I_D=250μA	1	1.5	2.0	V
Drain-Source On-State Resistance	$R_{DS(ON)}$	V_{GS}=10V, I_D=30 A		5.5	6.0	mΩ
		V_{GS}=4.5V, I_D=20A		8.0	9.8	
Forward Transconductance	g_{FS}	V_{DS}=5V,I_D=30A	10			S
Dynamic Characteristics (Note4)						
Input Capacitance	C_{Iss}	V_{DS}=15V,V_{GS}=0V, F=1.0MHz	-	1614	-	PF
Output Capacitance	C_{oss}		-	245	-	PF
Reverse Transfer Capacitance	C_{rss}		-	215	-	PF
Switching Characteristics (Note 4)						
Turn-on Delay Time	$t_{d(on)}$	V_{DD}=15V,I_D=30A V_{GS}=10V,R_G=3.0Ω	-	7.5	-	nS
Turn-on Rise Time	t_r		-	14.5	-	nS
Turn-Off Delay Time	$t_{d(off)}$		-	35.2	-	nS
Turn-Off Fall Time	t_f		-	9.6	-	nS
Total Gate Charge	Q_g	V_{DS}=15V,I_D=30A, V_{GS}=10V	-	33.7	-	nC
Gate-Source Charge	Q_{gs}		-	8.5	-	nC
Gate-Drain Charge	Q_{gd}		-	7.5	-	nC
Drain-Source Diode Characteristics						
Diode Forward Voltage (Note 3)	V_{SD}	V_{GS}=0V,I_S=30A	-	0.95	12	V
Diode Forward Current (Note 2)	I_S		-	-	70	A

Notes:

1. Repetitive Rating: Pulse width limited by maximum junction temperature.
2. Surface Mounted on FR4 Board, t ≤ 10 sec.
3. Pulse Test: Pulse Width ≤ 300μs, Duty Cycle ≤ 2%.
4. Guaranteed by design, not subject to production

Typical Performance Characteristics

Figure1: Output Characteristics

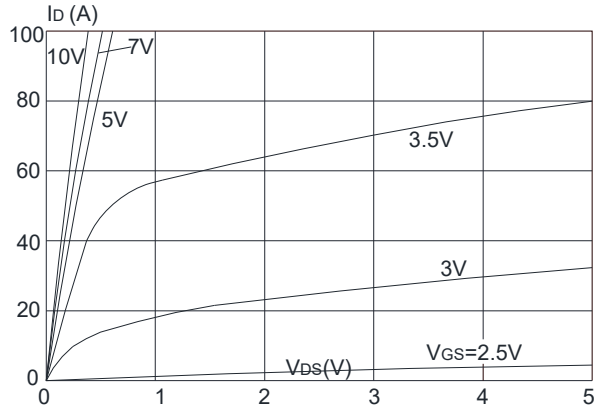

Figure 2: Typical Transfer Characteristics

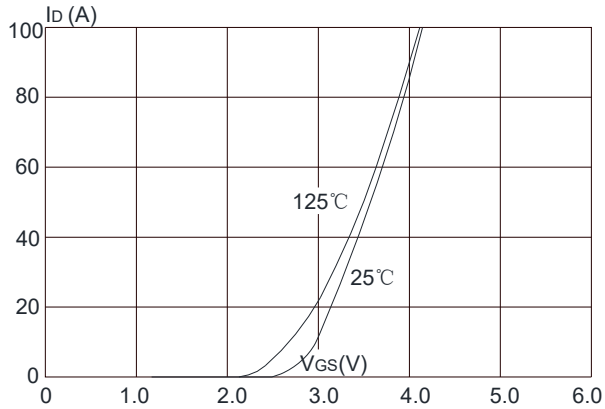

Figure 3: On-resistance vs. Drain Current

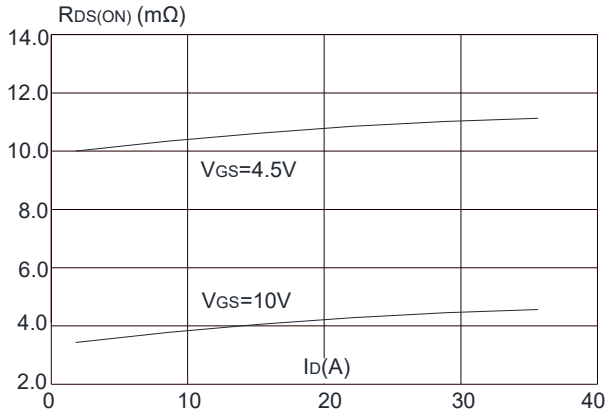

Figure 4: Body Diode Characteristics

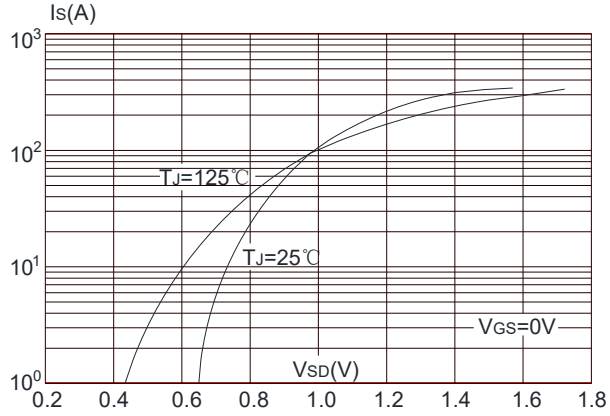

Figure 5: Gate Charge Characteristics

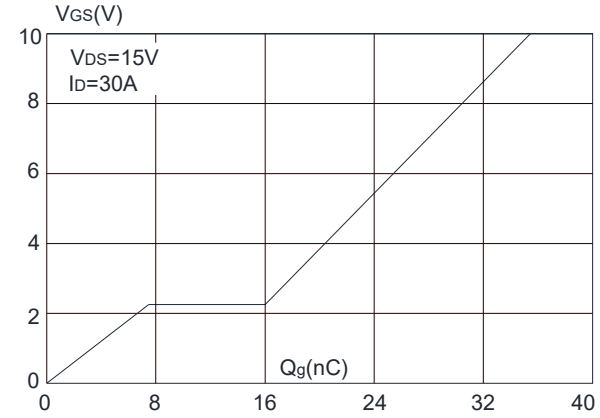

Figure 6: Capacitance Characteristics

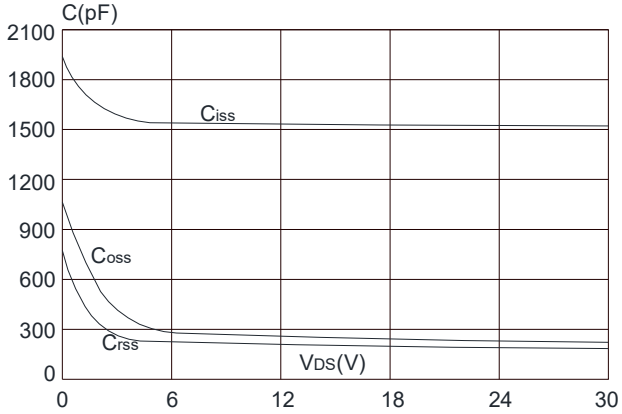

Figure 7: Normalized Breakdown Voltage vs. Junction Temperature

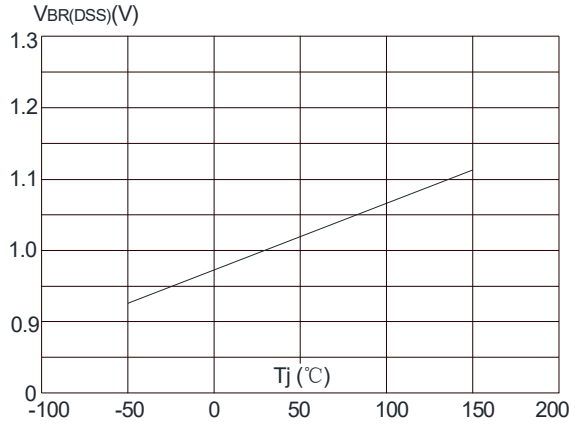

Figure 8: Normalized on Resistance vs. Junction Temperature

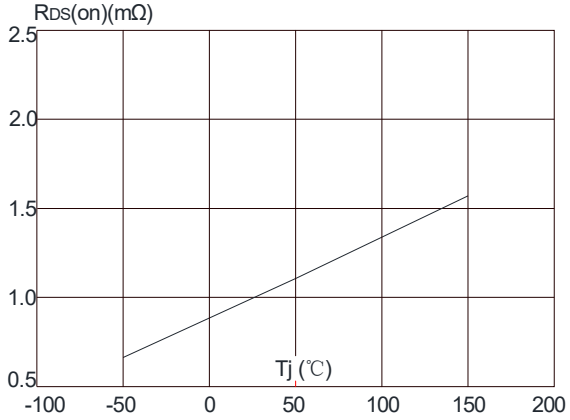

Figure 9: Maximum Safe Operating Area

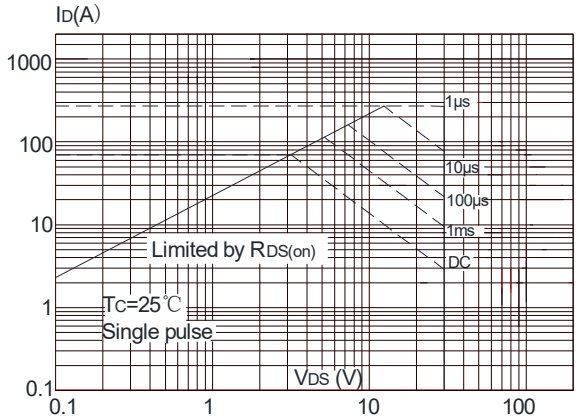

Figure 10: Maximum Continuous Drain Current vs. Case Temperature

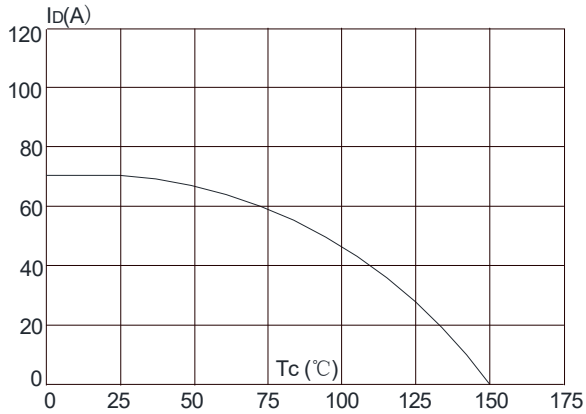

Figure.11: Maximum Effective Transient Thermal Impedance, Junction-to-Case

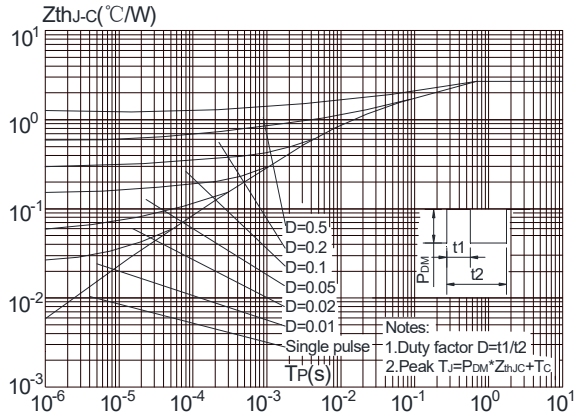

Test Circuit

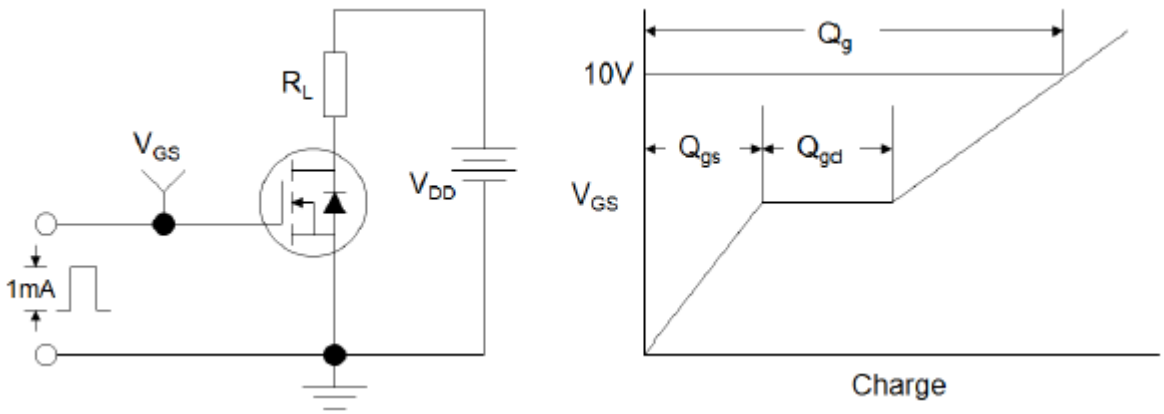

Figure1:Gate Charge Test Circuit & Waveform

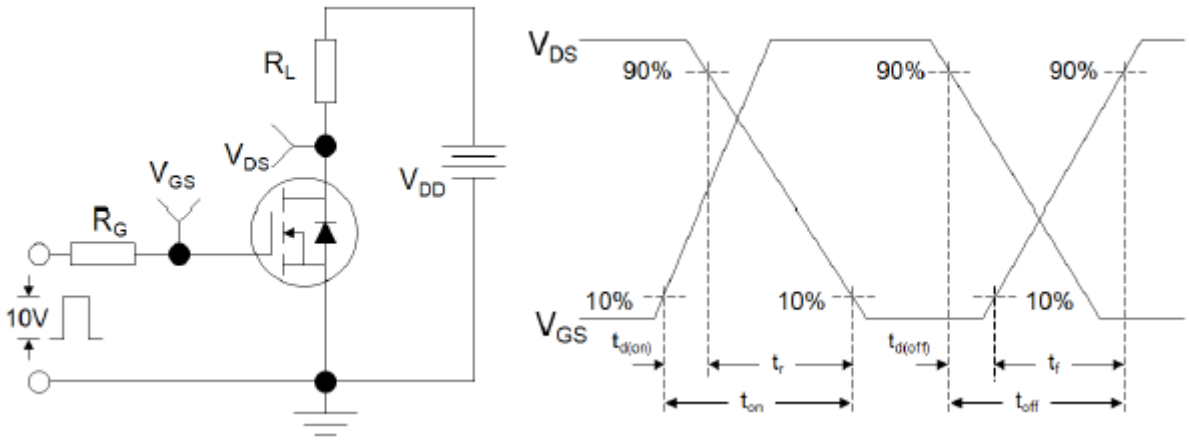

Figure 2: Resistive Switching Test Circuit & Waveforms

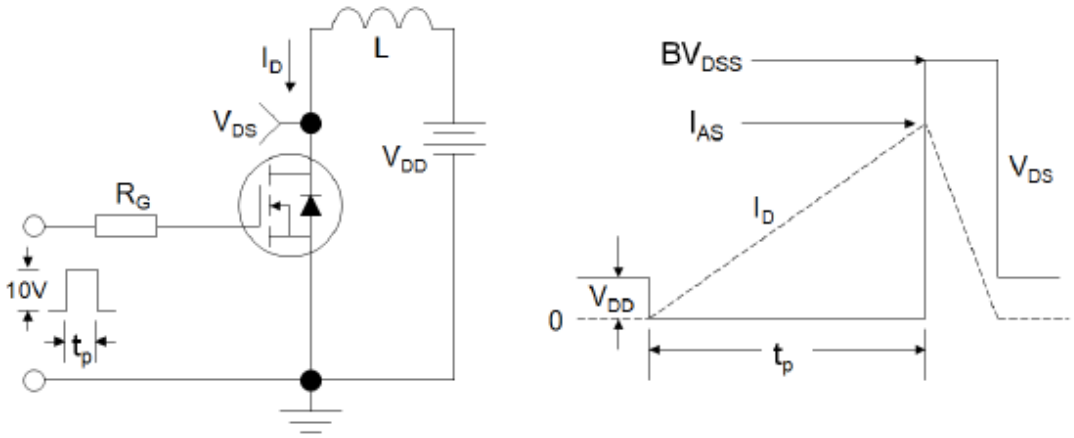

Figure 3:Unclamped Inductive Switching Test Circuit & Waveforms

Package Information

TO-252

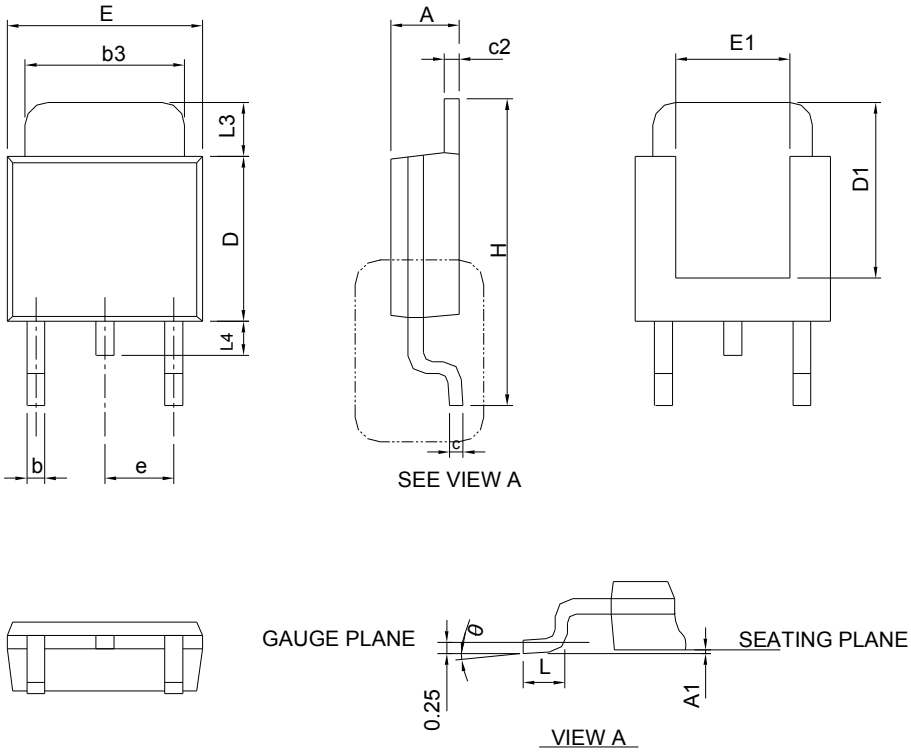

SYMBOL	TO-252-3			
	MILLIMETERS		INCHES	
	MIN.	MAX.	MIN.	MAX.
A	2.18	2.39	0.086	0.094
A1		0.13		0.005
b	0.50	0.89	0.020	0.035
b3	4.95	5.46	0.195	0.215
c	0.46	0.61	0.018	0.024
c2	0.46	0.89	0.018	0.035
D	5.33	6.22	0.210	0.245
D1	4.57	6.00	0.180	0.236
E	6.35	6.73	0.250	0.265
E1	3.81	6.00	0.150	0.236
e	2.29 BSC		0.090 BSC	
H	9.40	10.41	0.370	0.410
L	0.90	1.78	0.035	0.070
L3	0.89	2.03	0.035	0.080
L4		1.02		0.040
θ	0°	8°	0°	8°

RECOMMENDED LAND PATTERN

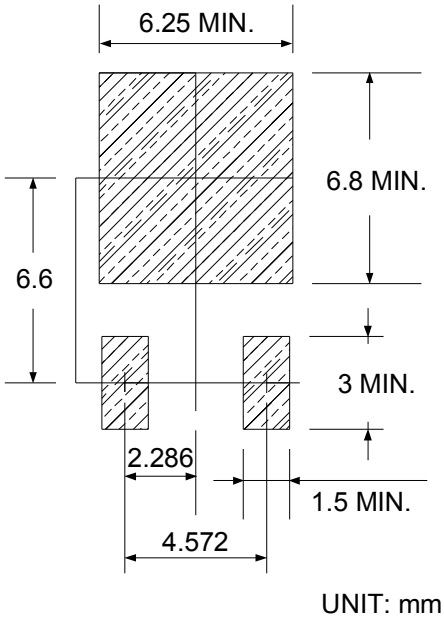

TO-251 Package Information

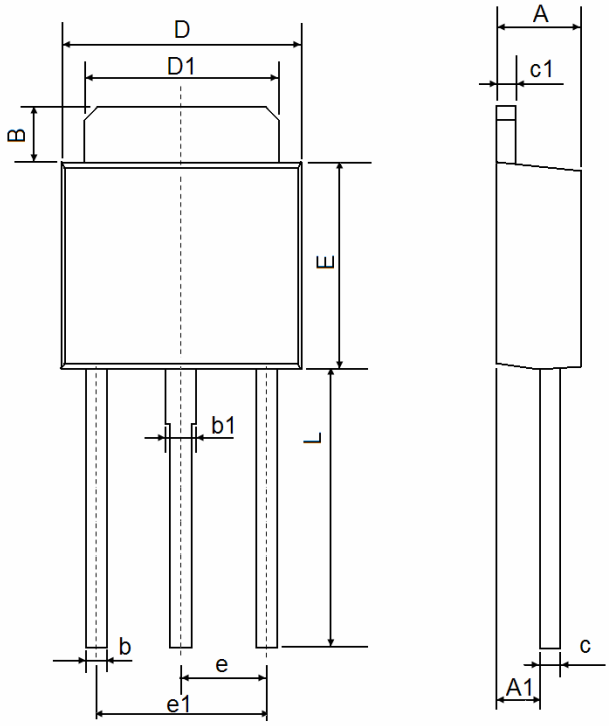

Symbol	Dimensions In Millimeters		Dimensions In Inches	
	Min.	Max.	Min.	Max.
A	2.200	2.400	0.087	0.094
A1	1.050	1.350	0.042	0.054
B	0.700	1.000	0.028	0.040
b	0.500	0.700	0.020	0.028
b1	0.700	0.900	0.028	0.035
c	0.430	0.580	0.017	0.023
c1	0.430	0.580	0.017	0.023
D	6.350	6.650	0.250	0.262
D1	5.200	5.400	0.205	0.213
E	5.400	6.000	0.213	0.237
e	2.300 TYP.		0.091 TYP.	
e1	4.500	4.700	0.177	0.185
L	4.900	9.400	0.194	0.372

Notes

1. All dimensions are in millimeters.
2. Tolerance ±0.10mm (4 mil) unless otherwise specified
3. Package body sizes exclude mold flash and gate burrs. Mold flash at the non-lead sides should be less than 5 mils.
4. Dimension L is measured in gauge plane.
5. Controlling dimension is millimeter, converted inch dimensions are not necessarily exac